FT-10R Circuit Diagram
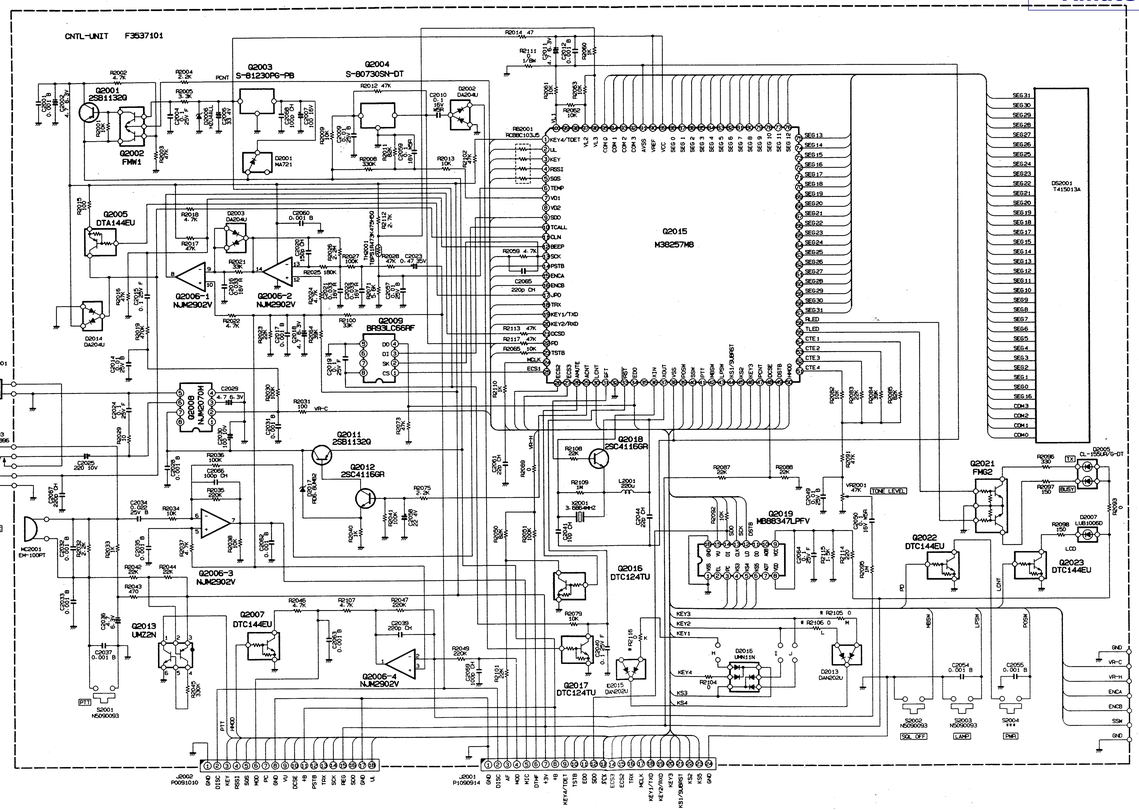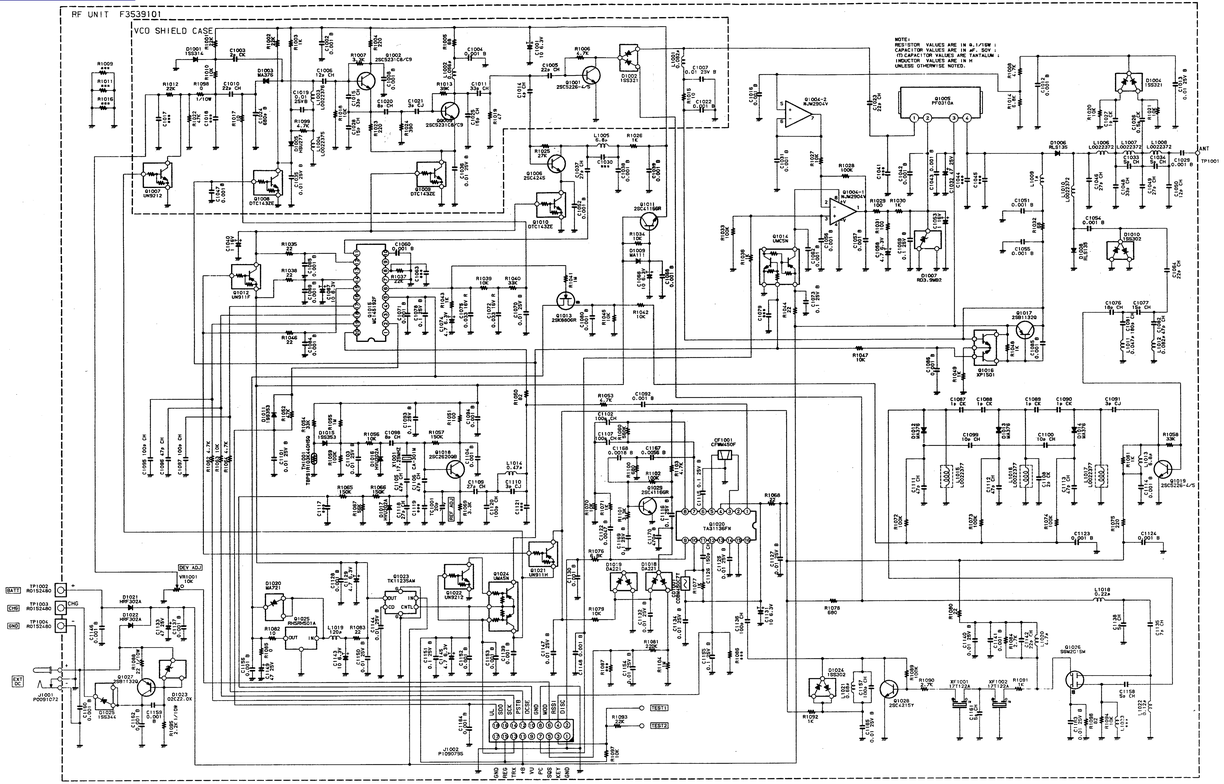
Downloaded by
Amateur Radio Directory